GRADALL®
XL 4310 III
HYDRAULIC EXCAVATOR



SPECIFICATIONS

Upperstructure Engine

Detroit Diesel OM904 Tier-3 diesel, 4 cycle, inline 4 cylinder, liquid cooled, electronic controlled. Vertical canister style lube filter attached to engine. Remote mount primary fuel/water separator.
Gross Rating: 173HP @ 2200 RPM (129kw)
498 ft. lb. Torque @ 1200-1600 RPM (675Nm)
Net Rating: 153 HP @ 2200 RPM (114kw)

Variable viscous fan clutch system. Vertical stacked hyd. oil cooler, charge air cooler and radiator

Maximum slope: 30°

12 volt starter, 100 amp alternator, two SAE #C31-S 1000 CCA batteries, two-stage dry type air cleaner with centrifugal precleaner and safety element. Evacuator valve and service indicator.

Fuel tank capacity: 82 gallons (310 L).

Hydraulic System

PUMPS
One load-sensing, axial piston pump; oil flow 0-105 GPM (0-435 L/min).

Tandem gear pump (steering, brake/pilot) 10 GPM (38 L/min), 6GPM (23 L/min)

SYSTEM MONITOR
Electronic monitor in cab indicates low hydraulic fluid level, high hydraulic fluid temperature, system working pressure, system pilot pressure.

SYSTEM SPECIFICATIONS

Six cylinders
- 1 tool: 5.0" ID, 3.0" rod (127 mm x 76 mm), 25.9" (658 mm) stroke.
- 2 hoist: 4.25" ID, 3.15" rod (108 mm x 80 mm), 31.0" (787 mm) stroke.
- 1 telescope: 3.5" ID, 2.559" rod (89 mm x 65 mm), 12'6" (3.81 m) stroke.
- 2 single-acting axle oscillation cylinders: 4.528" ID, 4.528" rod (115 mm x 115 mm), 6.25" (159 mm) stroke.

Three hydraulic motors
Swing, 64hp (48 kW); tilt, 21 hp (16 kW); propel motor, 113 hp (84 kW).

Operating pressures:

Hoist	4,900 psi	(331 BAR)
Tilt	2,500 psi	(172 BAR)
Swing	4,200 psi	(290 BAR)
Tool	4,900 psi	(331 BAR)
Telescope	4,900 psi	(331 BAR)
Propel	4,900 psi	(331 BAR)
Pilot System	550 psi	(38 BAR)
Braking and Steering	2,400 psi	(165 BAR)
Blade and Stabilizers	4,000 psi	(207 BAR)

Oil Capacity
Reservoir system 65 gallons (246 L). Pressurized reservoir with visual oil level gauges.

Filtration System
10 micron return filter, 10 micron pilot filter.

Fin and tube-type oil cooler with thermal by-pass and relief valves.

Pressure-compensated, load-sensing valves with circuit reliefs in all circuits.

Operator Cab

All-weather cab with tinted safety glass windows, acoustical lining, four-way adjustable operator's seat, AM/FM radio, filtered fresh air heater, defroster, and A/C. Front window has heat resistant glass. Rearview mirrors on right and left sides. Standard equipment includes operator's seat belt, and swing lights.

Function Forces

Rated Boom Force:
22,075 lb (98.2 kN)
Rated Ripper Tooth Force:
25,405 lb (113 kN)
Boom Rotating Torque:
25,800 ft•lb (34,980 N•m)
Boom Rotating Speed:
7.0 RPM

Controls

Two electronic joysticks (hoist and bucket, telescope and swing), one rocker switch (tilt) control upperstructure. Joysticks mounted on arm pods, independently adjustable for individual operator comfort and convenience. Quick change joystick pattern switch located on instrument panel. Joysticks are self-centering; when controls are released, power for movement disengages and swing and tilt brake set automatically.

A tilting/telescoping steering column provides smooth, comfortable steering. Hydraulic foot pedal controls braking functions, giving smooth performance with infinite control. Travel speed is regulated with an electronic foot pedal control. A switch on the FWD/REV selector provides 1st/2nd gear selection. Independent rocker switches control stabilizers, axle oscillation, park brake, and hazard lights. Another switch on the column provides marker lights, high/low headlights, and direction indicators.

Engine Controls and Instrumentation
Key operated ignition/starter switch, throttle, and main battery disconnect switch. air cleaner condition indicator. Electronic monitor indicates fuel level, low battery charge, lube oil pressure, high coolant temperature, engine rpm, and engine hours. Fuel saving auto idle feature sends engine rpm to idle when control circuits are in neutral for seven seconds.

Undercarriage

Both axles are equipped with internal wet-disc type service brakes. The steering axle is fitted with oscillation lock cylinders.

Tires: 10.00x20 Super-Lug (Optional foam filled or solid)
Axles: ZF Model 3070 (FTF 2090)
Transmission: ZF Model HL 290
Drive Motor: Rexroth A6 Series, 160cc/Rev.
Minimum Turning Radius: 25'5" (7.75m)

	Creeper Mode	Standard Mode
First Gear	1.8 mph (2.9 kmh)	5.7 mph (9.2 kmh)
Second Gear	6.3 mph (10.1 kmh)	12 mph (19.3 kmh)

Variable displacement high torque piston motor powers the 2-speed power shift transmission. Speed mode selection can also be done while moving. Electronically operated travel alarm signals excavator movement.

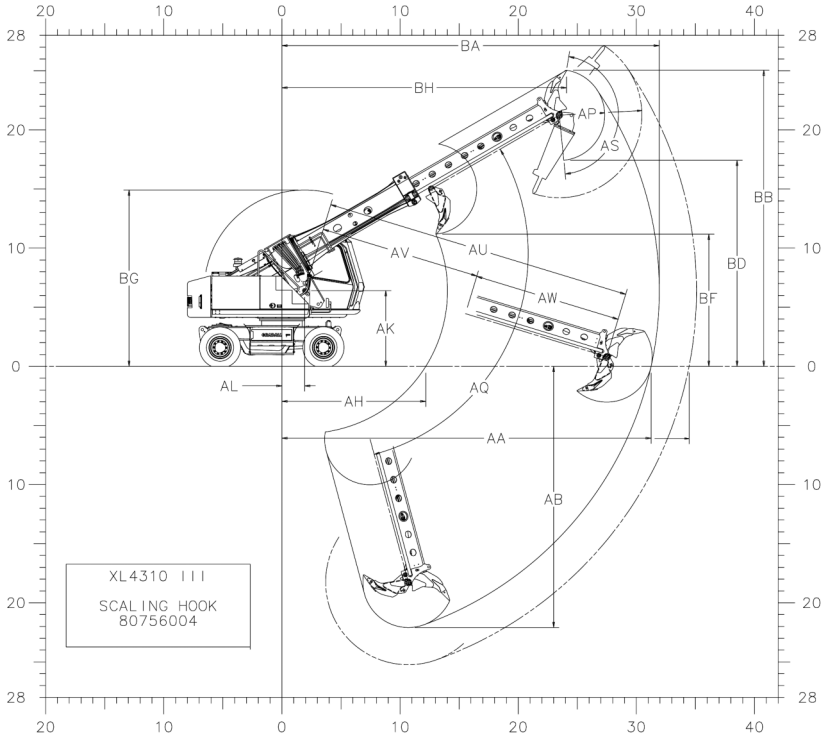

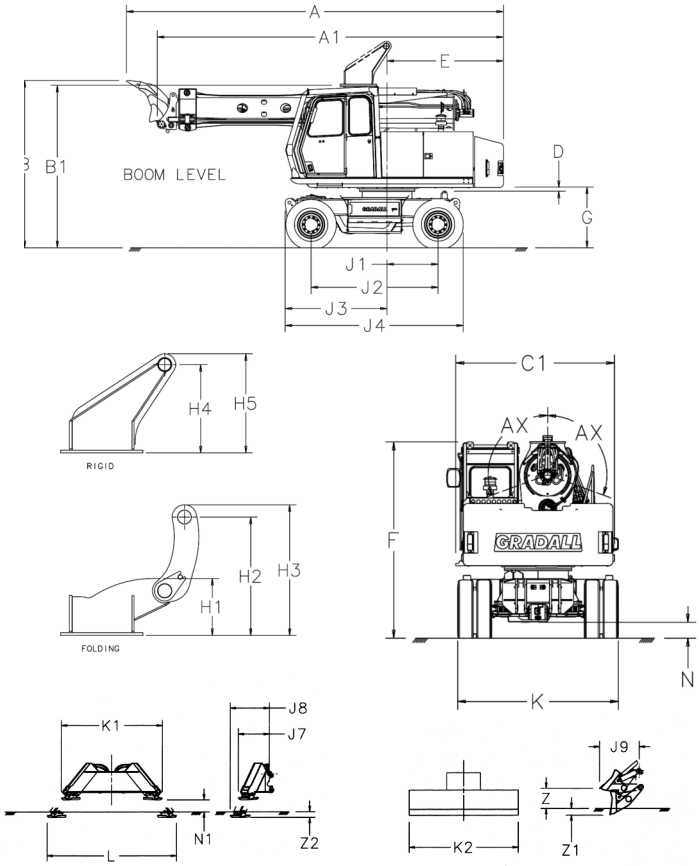

Dimensions

A Overall length with attachment open (Travel Position): 26'0" (7.9)
A1 Overall length without attachment (Travel Position): 23'10" (7.3)
B Overall height with attachment open (Travel Position): 11'6" (3.5)
B1 Overall height without attachment (Travel Position): 11'2" (3.4)
C1 Width of upperstructure: 9'0" (2.7)
D Minimum clearance, upperstructure to undercarriage: 3" (78mm)
E Swing clearance, rear of upperstructure: 8'0" (2.4)
F Top of cab guard to groundline: 11'1" (3.4)
G Clearance, upperstructure to groundline: 4'2" (1.3)
H1 Height of optional folding lift yoke lowered: 1'9" (0.5)
H2 Height of pin of optional folding lift yoke: 3'7" (1.1)
H3 Overall height of optional folding lift yoke: 4'0" (1.2)
H4 Height to pin of optional rigid lift yoke: 2'8" (0.8)
H5 Overall height of optional rigid lift yoke: 3'0" (0.9)
J1 Axis of rotation to centerline of drive sprockets: 3'6" (1.1)
J2 Wheelbase of undercarriage: 8'9" (2.7)
J3 Axis of rotation to front of undercarriage: 7'0" (2.1)
J4 Nominal overall length of undercarriage: 12'3" (3.7)
J5 Axis of rotation to front option attachment pin: 6'9" (2.1)
J6 Axis of rotation to rear option attachment pin: 4'9" (1.4)
J7 Outrigger length, attachment pin to pad in up position: 2'7" (0.8)
J8 Outrigger length, attachment pin to pad in down position: 3'3" (1.0)
J9 Blade length, attachment pin across blade in up position: 3'4" (1.0)
K Overall width of undercarriage: 9'1" (2.8)
K1 Overall width outrigger (up position): 8'4" (2.5)
K2 Overall width blade: 9'0" (2.7)
L Overall width outrigger (down position): 10'8" (3.3)
N Ground clearance (per SAE J1234): 11" (275mm)
N1 Ground clearance (outrigger option): 12" (300mm)
Z Blade above ground (option): 1'8" (505mm)
Z1 Maximum lift of blade (option): 7'0" (166mm)
Z2 Maximum lift of outrigger (option): 6'0" (142mm)
AA Maximum radius at groundline (Scaling Hook): 31'3" (9.5)
Maximum radius at groundline (S-29 Hammer): 34'6" (10.5)
AB Maximum depth: 22'1" (6.7)
AH Minimum radius at groundline: 12'2" (3.7)
AK Boom pivot to groundline: 6'5" (2.0)
AL Boom pivot to axis of rotation: 1'11" (585 mm)
AP Attachment tooth radius (scaling hook): 3'10" (1.2)
Attachment bit radius (S-29 Hammer): 7'0" (2.1)
AQ Boom pivot angle: 30° Up and 75° Down
AS Attachment pivot angle: 165°
AU Maximum telescoping boom length
(boom pivot to attachment pivot): 26'1" (7.9)
AV Minimum telescoping boom length
(boom pivot to attachment pivot): 13'7" (4.1)
AW Telescoping boom travel: 12'6" (3.8)
AX Attachment tilt angle (continuous): 360°
BA Maximum radius of working equipment: 31'11" (9.7)
BB Maximum height of working equipment: 25'1" (7.6)
BD Minimum clearance of attachment with pivot at maximum height: 17'5" (5.3)
BF Minimum clearance of attachment at maximum boom height: 11'2" (3.4)
BG Maximum height of working equipment with attachment
below groundline: 14'11" (4.5)
BH Radius of attachment tooth at maximum height: 24'1" (7.3)

Metric units are meters (m) unless noted.

GRADALL®

406 Mill Ave. SW, New Philadelphia, Ohio 44663
Phone: 330-339-2211 Fax: 330-339-8468
www.gradall.com

ALAMO GROUP

Certified ISO 9001

Weight

Approximate working weight with 36" (914mm) excavating bucket, fuel tank half full.46,580 lb (21,128 kg)
Outriggers = 2,720 lb (1,234 kg)
Blade = 1,529 lb (694 kg)

Swing

Priority swing circuit with axial piston motor. Planetary transmission.

Swing speed: 7.0 rpm.

Swing Brake
Automatic spring-set/hydraulic release wet disc parking brake. Dynamic braking is provided by the hydraulic system.

Form No. 11210 4/12
Printed in USA

It is Gradall Policy to continually improve its products. Therefore designs, materials and specifications are subject to change without notice and without incurring any liability on units already sold. Units shown may have optional equipment.